Product specification: ASL XD4000HP/G

Warranty:

100% Credit: 0-1100

Technical specification:

Power (W) - 4000

Rated Current (A.D.C.) - 120

Voltage (V.D.C.) - 34.5

Current Control Range (A.D.C.) - 85-125

Average Lumen Output (Lm) - 180000

Burning Position - H±15° V±15°

Forced Air Cooling (m/sec.) - 10-13

Cross Reference:

LTI - XDC-4000B

OSRAM - XBO 4000W/DHP OFR & XBO 4000W/DHP CL OFR
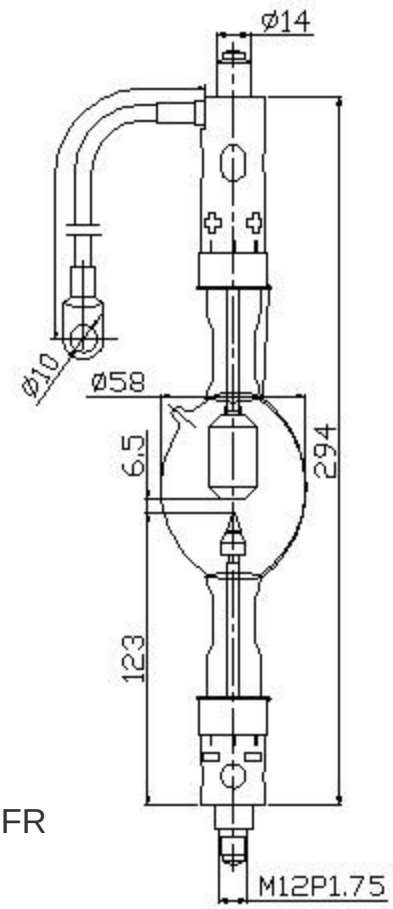
USHIO - DXL-40BAF